ATM19264B SERIES---------- GRAPHIC DOT MATRIX LCD MODULES

* 192 x 64 Dots
* View Angle (6:00)
* 1/64 Duty, 1/9 Bias
* LED Backlight (Yellow green)
* Transflective
* STN (Yellow green)
* Controller/Driver (S6B0107 or Eqv.)
* Operating Temp (- 20℃~70℃)

External Dimensions

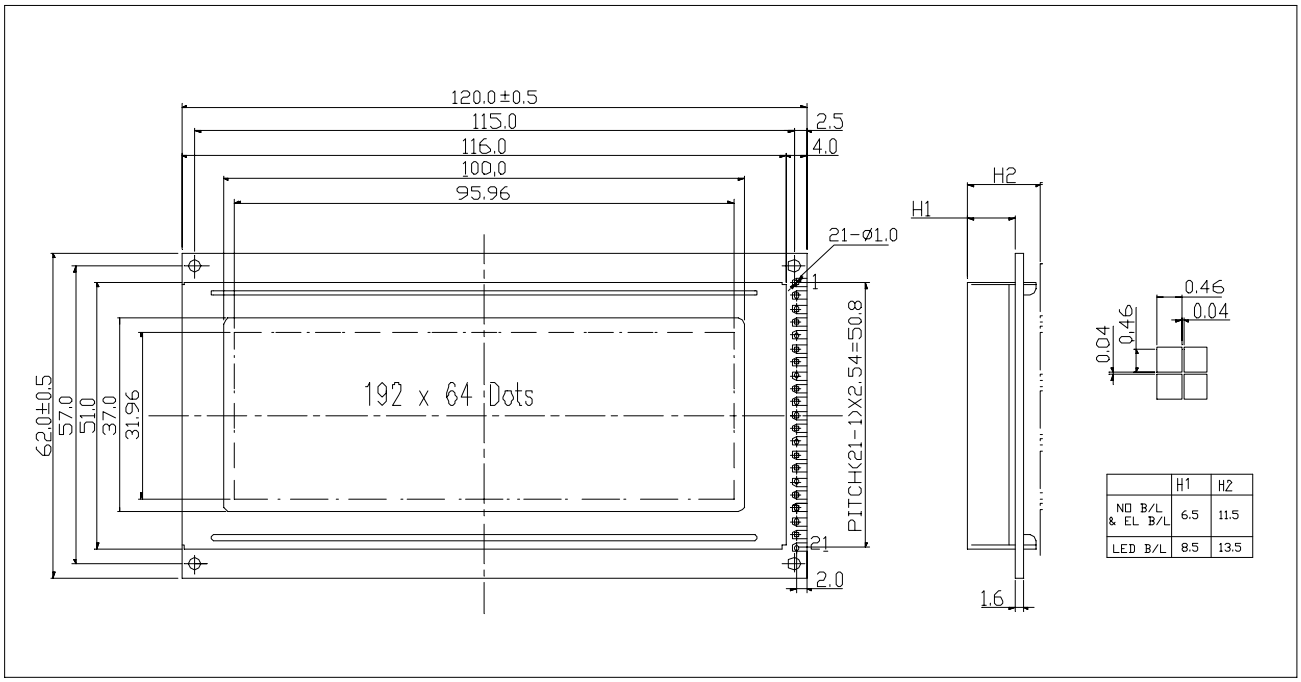

Block Digram

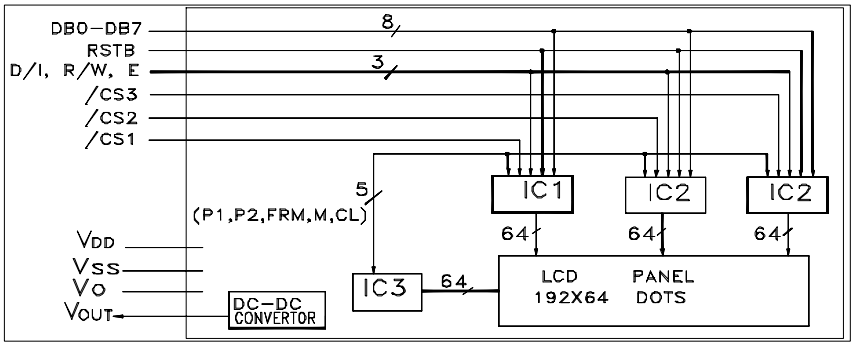

Power Supply

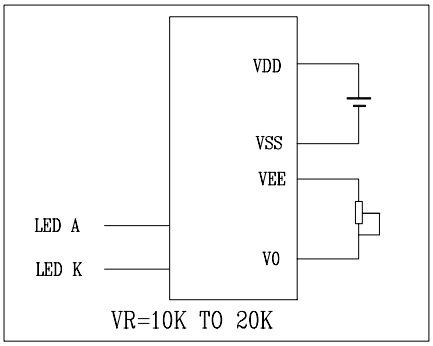

Mechanical Specifications

Item	Description(mm)
Size	120(L)x62(W)x13.5(H)
V.A	100(L)x37(W)
Dot Pitch	0.50x0.50
Dot Size	0.46x0.46

Electrical Specifications

Item	Symbol	Min	Typ	Max	Unit
Supply Voltage for Logic	VDD	4.5	5.0	5.5	V
Supply Voltage for LCD	VLCD	11.0	11.5	12.0	V
Supply Current for Logic	IDD		1.0	3.0	mA
Supply Current for LED	IF			510	mA

Interface Signals---- J1

Pin	Symbol	Level	Description	Pin	Symbol	Level	Description
1	VSS	0V	Ground	8~15	DB0~DB7	H/L	Data Bus Line
2	VDD	+5V	Supply Voltage for Logic	16	CS1	H/L	Chip Selection for IC1
3	V0	--	Operating Voltage for LCD	17	CS2	H/L	Chip Selection for IC2
4	VEE	--	Negative Voltage Output	18	CS3	H/L	Chip Selection for IC3
5	RS	H/L	H: Data Input L: Instruction Code Input	19	RST	L	Reset
6	R/W	H/L	H: Data Read L: Data Write	20~21	LED	--	A:+5V K:0V
7	E	H,H-L	Enable Signal				